STATE	PROJECT NUMBER	SHEET NO.	TOTAL SHEETS
GA.	STP-1M-022-1(26)	8	770

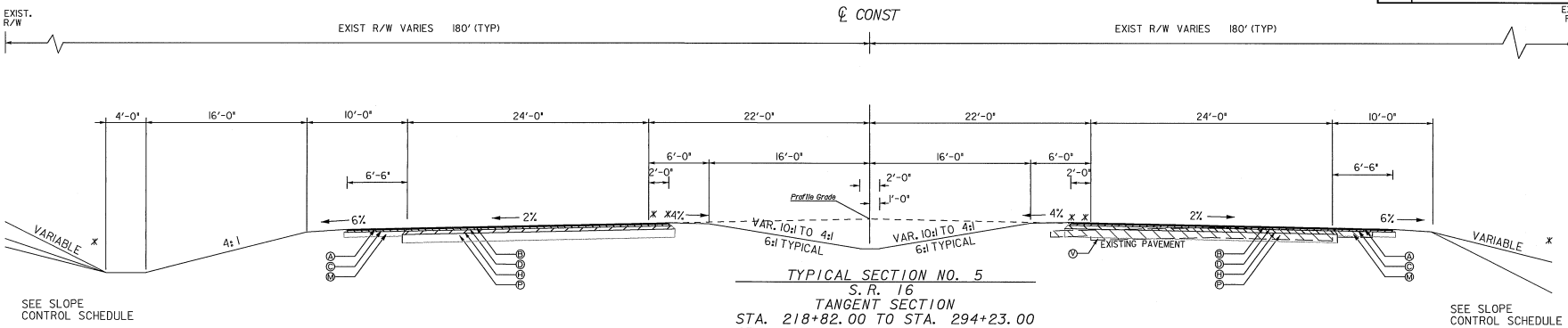

TYPICAL SECTION NO. 5
S. R. 16
TANGENT SECTION

STA. 218+82.00 TO STA. 294+23.00
STA. 334+79.00 TO STA. 353+10.00
STA. 358+90.00 TO STA. 368+60.00
STA. 379+40.00 TO STA. 388+10.00
STA. 395+61.74 TO STA. 423+10.00
STA. 434+40.00 TO STA. 444+78.00

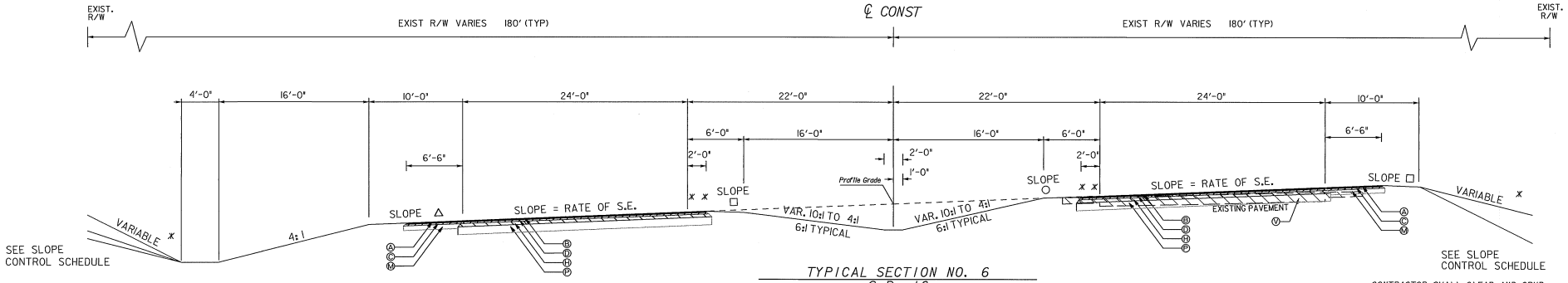

TYPICAL SECTION NO. 6
S. R. 16
SUPERELEVATED SECTION
SEE PLANS FOR SUPERELEVATION RATE

STA. 183+48.44 TO STA. 218+82.00
STA. 294+23.00 TO STA. 334+79.00
STA. 444+78.00 TO STA. 447+60.00
STA. 461+40.00 TO STA. 501+94.00
STA. 509+40.00 TO STA. 545+60.00

REQUIRED PAVEMENT

A ASPHALTIC CONCRETE, 12.5 mm SUPERPAVE (165 lb/yd²), DESIGN LEVEL A
B ASPHALTIC CONCRETE, 12.5 mm SUPERPAVE (165 lb/yd²), DESIGN LEVEL B
C ASPHALTIC CONCRETE, 19 mm SUPERPAVE (220 lb/yd²), DESIGN LEVEL A
D ASPHALTIC CONCRETE, 19 mm SUPERPAVE (220 lb/yd²), DESIGN LEVEL B
E
F
G
H ASPHALTIC CONCRETE, 25 mm SUPERPAVE (660 lb/yd²), DESIGN LEVEL A
I ASPHALTIC CONCRETE, 19 mm SUPERPAVE (330 lb/yd²), DESIGN LEVEL A
J
K PORTLAND CEMENT CONCRETE PAVEMENT, CLASS 3, 12"
L CONCRETE MEDIAN, DOWELED, 6"
M 6" GRADED AGGREGATE BASE
N CONCRETE CURB AND GUTTER, 8" X 30", TP 2
O 14" GRADED AGGREGATE BASE
P 12" GRADED AGGREGATE BASE
Q CONCRETE CURB AND GUTTER, 8" x 30", TP 7
R CONCRETE MEDIAN PAVING, 4"
S CONCRETE SIDEWALK, 4"
T LONGITUDINAL CONSTRUCTION JOINT WITH TIE BARS. SEE GA. STD. 5046-H FOR DETAILS.
U 5/8" TIE BARS, SPACED 18 INCH CENTER TO CENTER
V REMOVE EXISTING PAVEMENT

○ SLOPE 1/2" / 1'-0" OR RATE OF S.E. WHICHEVER IS GREATER

△ SLOPE 3/4" / 1'-0" OR RATE OF S.E. WHICHEVER IS GREATER

□ SLOPE AS FOLLOWS:
S.E. RATE OF 0.04'/FT OR LESS USE 1/2" IN 1'-0"
S.E. RATE OF 0.05'/FT, USE 3/8" IN 1'-0"
S.E. RATE OF 0.06'/FT, USE 1/4" IN 1'-0"
S.E. RATE OF 0.07'/FT, USE 1/8" IN 1'-0"
S.E. RATE OF 0.08'/FT, USE FLAT

ALGEBRAIC DIFFERENCE IN PAVING AND SHOULDER SLOPES NOT TO EXCEED 0.08'/FT

xx SLOPE OF PAVED SHOULDERS SAME AS ADJACENT TRAVEL LANES

CONTRACTOR SHALL CLEAR AND GRUB THE ENTIRE RIGHT-OF-WAY WIDTH EXCEPT WITHIN ENVIRONMENTALLY SENSITIVE AREAS (ESA) AS SHOWN ON THE PLANS FROM STA. 317+60 TO 319+40.

• SLOPE CONTROL SCHEDULE		
SLOPE	CUT	FILL
4:1	0-10'	0-10'
2:1	OVER 10'	OVER 10'

NOTE:
GUARDRAIL WILL BE REQUIRED IN ALL AREAS WITH 2:1 SLOPES

HDR/WLJorden
ENGINEERS·SURVEYORS·PLANNERS
2810 PREMIERE PARKWAY, SUITE 200
DULUTH, GEORGIA 30097
(678) 775-4600 FAX (678) 775-4848

DATE	REVISIONS	DATE	REVISIONS

GEORGIA
DEPARTMENT OF TRANSPORTATION
TYPICAL SECTIONS
PROJECT NO. STP-1M-022-1(26)
SPALDING COUNTY
DATE 09-10-04 DWG NO. 5-03

DGN@SPECIFICATION@@@@@@@@@@@@@@@@@@@@@@
SHOWDATETIME@@@@@@

GDOT

STATE	PROJECT NUMBER	SHEET NO.	TOTAL SHEETS
GA.	STP-IM-022-1(26)	106	770

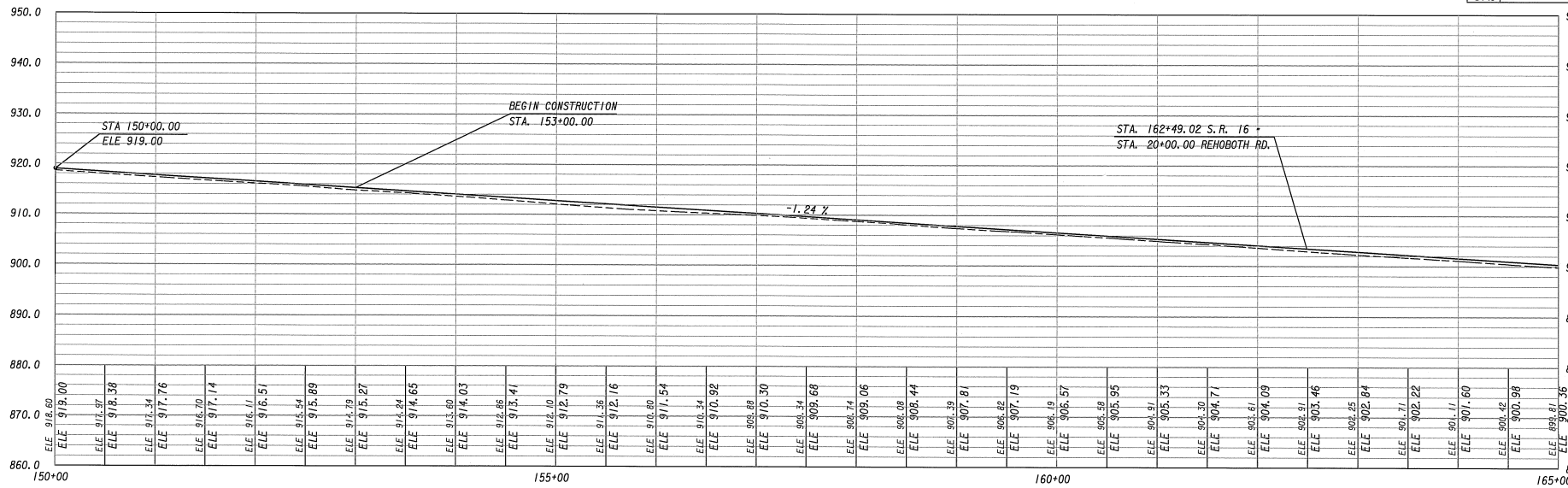

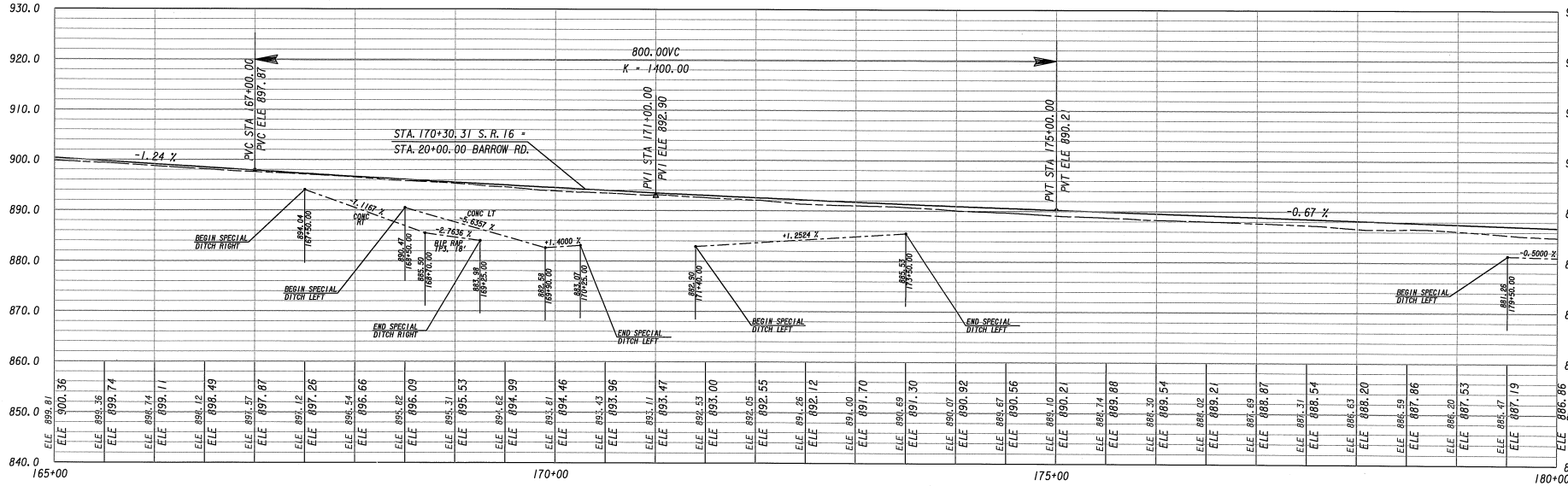

HDR/WLJorden
ENGINEERS·SURVEYORS·PLANNERS
2810 PREMIERE PARKWAY, SUITE 200
DULUTH, GEORGIA 30097
(678) 775-4800 FAX (678) 775-4848

SCALE: 1:10 VERT
1:50 HORIZ

DEPARTMENT OF TRANSPORTATION
STATE OF GEORGIA

S. R. 16 ARTHUR BOLTON PARKWAY
STA 150+00 TO STA 180+00

DRAWING NO. 15-01

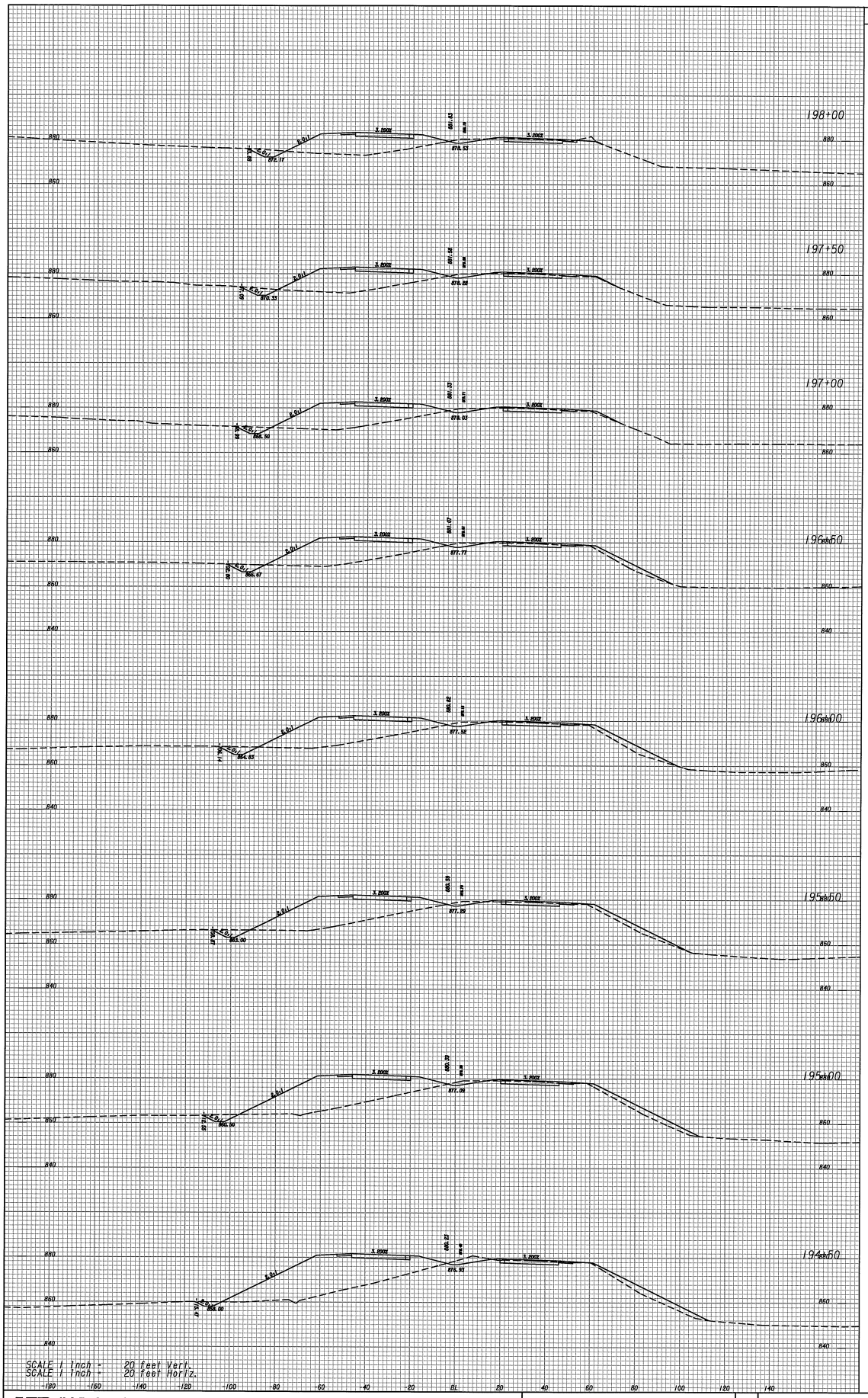

HDR/WLJorden
ENGINEERS-SURVEYORS-PLANNERS
2810 PINNACLE PARKWAY, SUITE 200
DULUTH, GEORGIA 30097
(678) 775-4800 FAX (678) 775-4848

CROSS SECTIONS	STATE	PROJECT NUMBER	SHEET NO.	TOTAL SHEETS
SR 16 - ARTHUR BOLTON PKWY	GA.	STP-IM-022-1(26)	236	770

...\10069\cadd\dgn\xsshv1.dgn 9/9/2004 12:09:30 PM