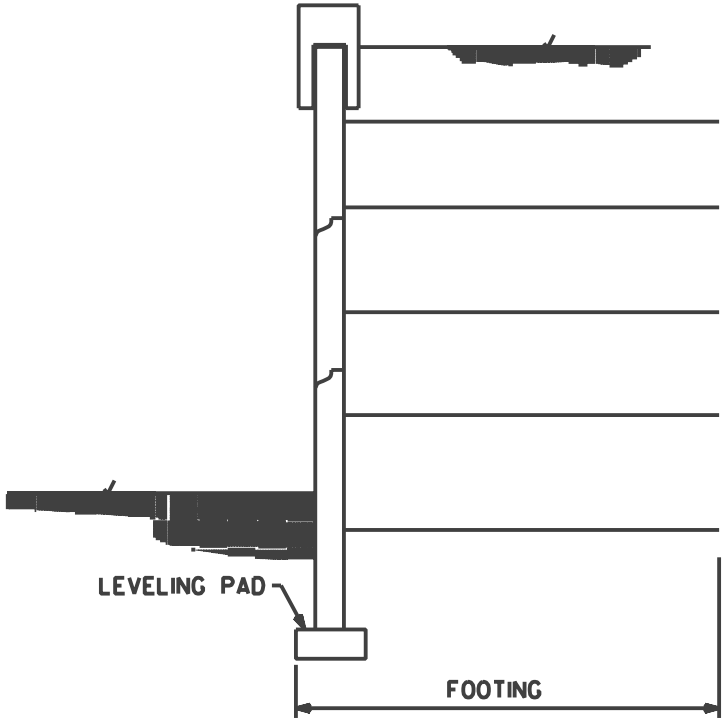

SECTION VIEW

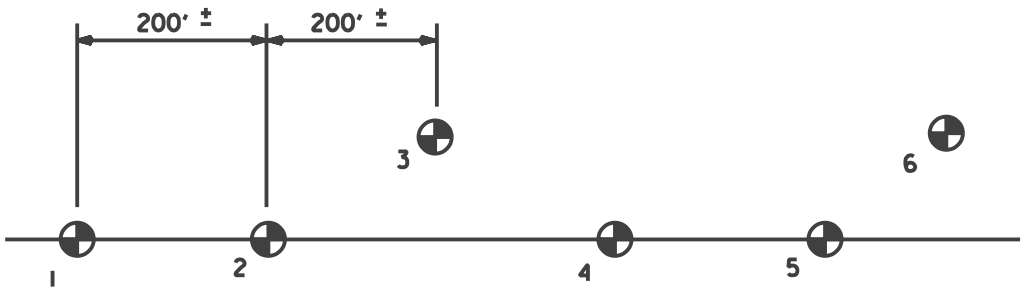

MSE WALL BORING LAYOUT

NO SCALE

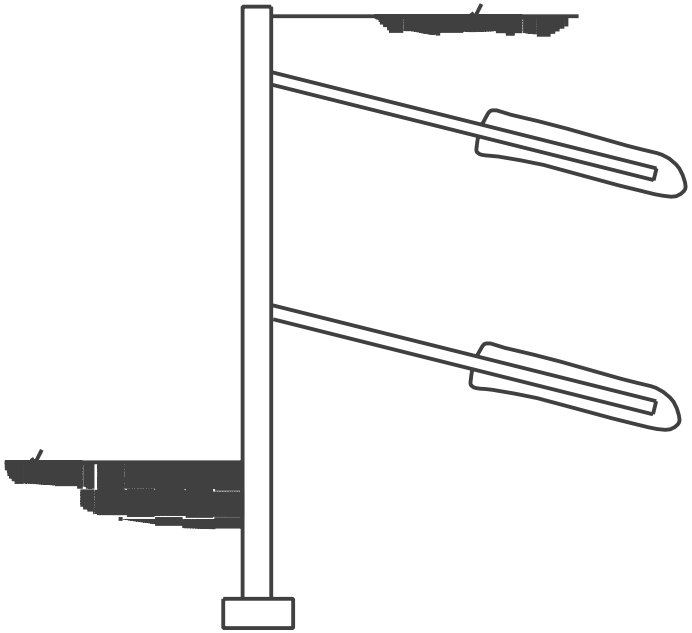

SECTION VIEW

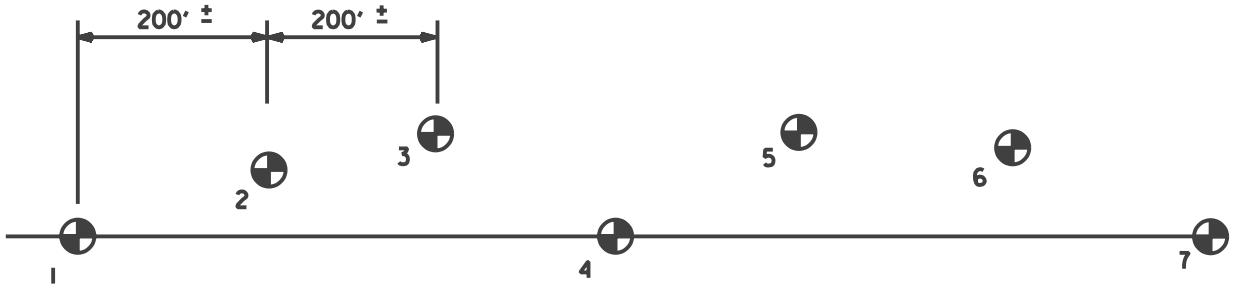

TIEBACK & SOIL NAIL WALL BORING LAYOUT

NO SCALE

5.3.12